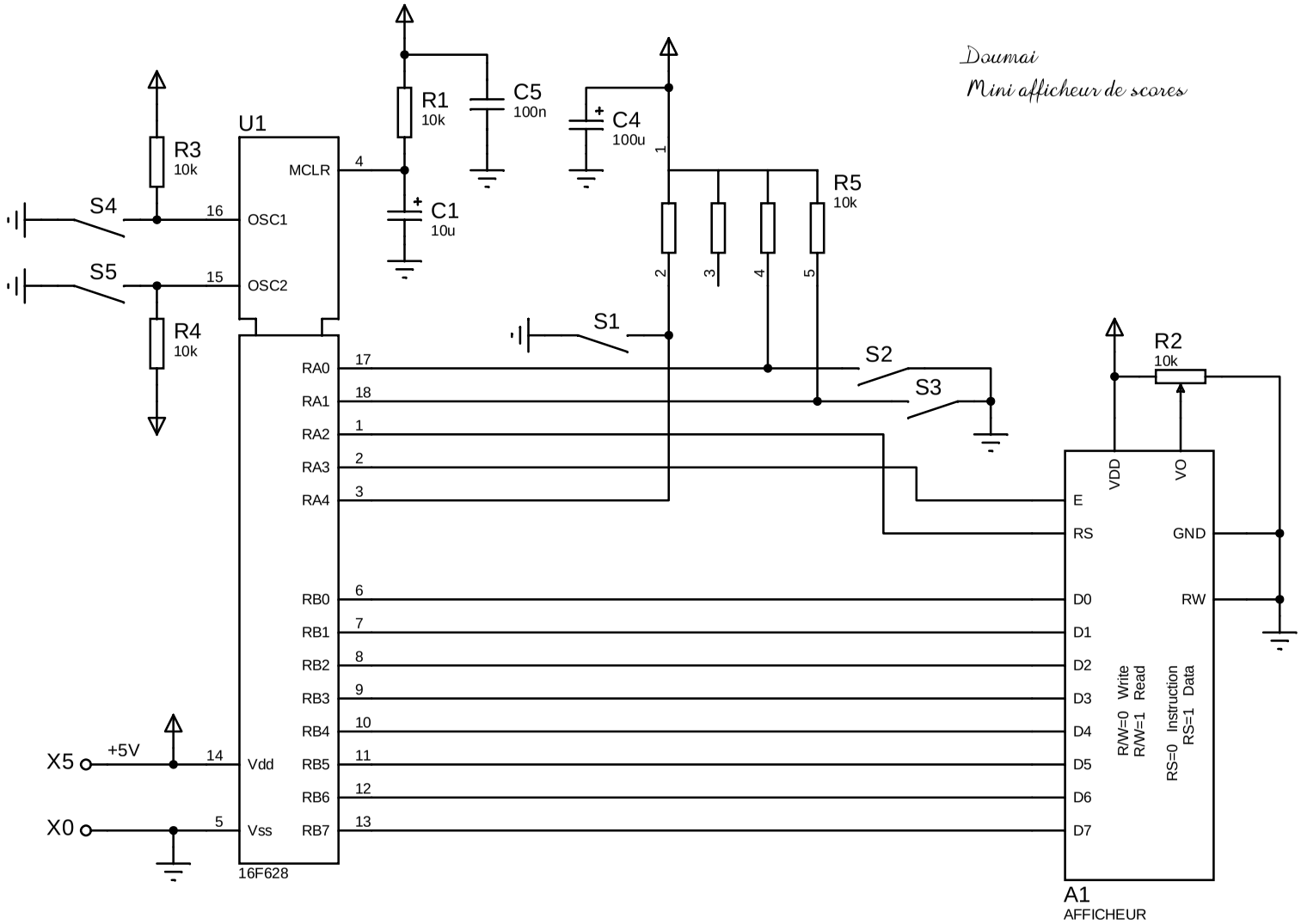
Doumai
Mini afficheur de scores
U1
16F628
MCLR
OSC1
OSC2
Vdd
Vss
RA0
RA1
RA2
RA3
RA4
RB0
RB1
RB2
RB3
RB4
RB5
RB6
RB7
R1
10k
C1
10u
C5
100n
C4
100u
R3
10k
R4
10k
R5
10k
R2
10k
S1
S2
S3
S4
S5
X5
X0
+5V
A1
AFFICHEUR
E
RS
D0
D1
D2
D3
D4
D5
D6
D7
VDD
VO
GND
RW
R/W=0 Write
R/W=1 Read
RS=0 Instruction
RS=1 Data